SET-SC-SET (HSH), 1-volume and 1-tone with Custom Freeway switch

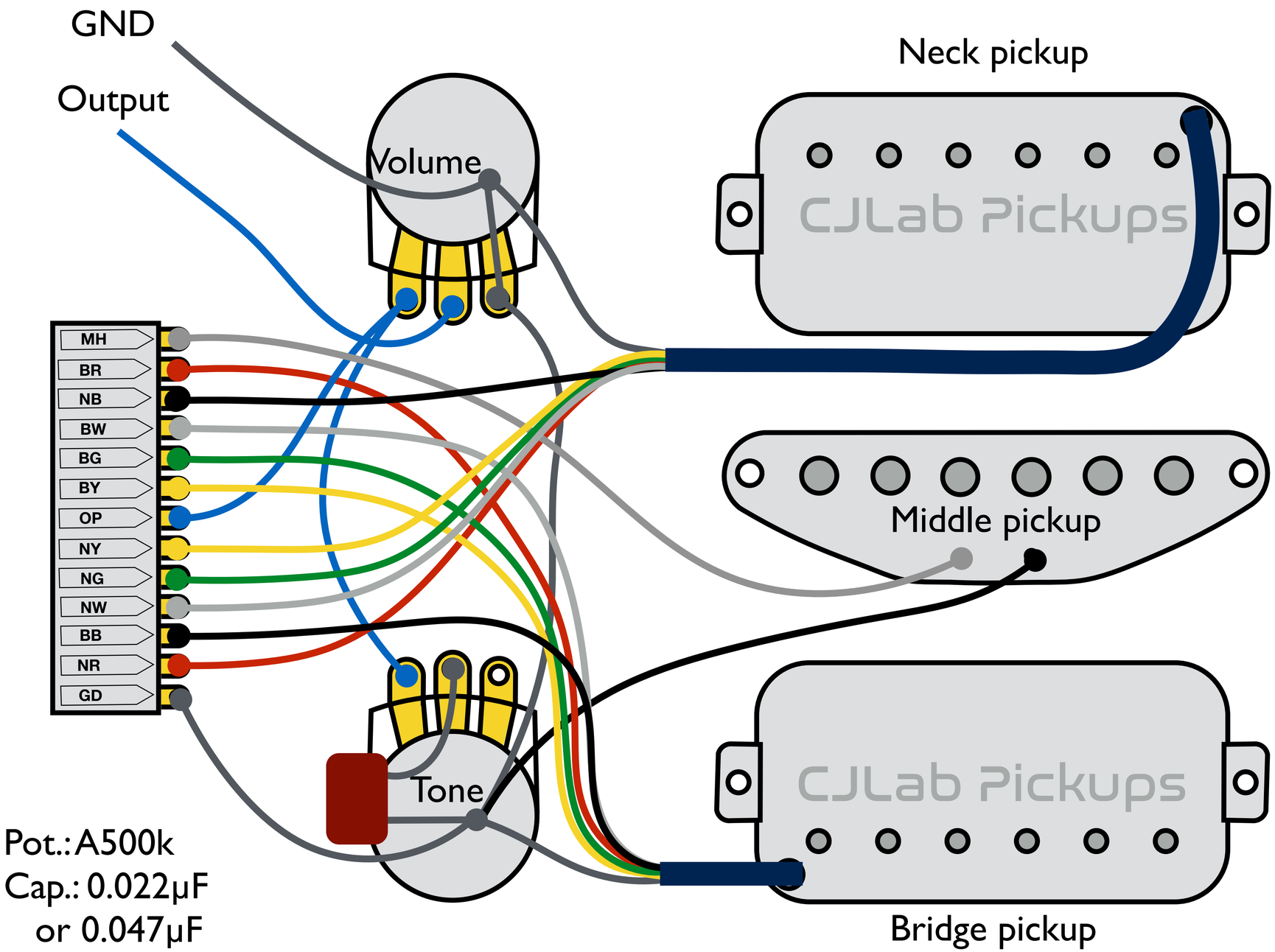

5-way Freeway switch	
Pos. 1-1	N SET
Pos. 1-2	N SET / Middle
Pos. 1-3	Middle
Pos. 1-4	Middle / B SET
Pos. 1-5	B SET
Pos. 2-1	N HB
Pos. 2-2	N SE
Pos. 2-3	N HB / B HB
Pos. 2-4	B SE
Pos. 2-5	B HB